Higher Graphic Communication

Homework Book

Bsi/2D CAD/DTP terms

1.(a)Sketch what happens to the given graphic when the CAD command is applied to it. Marks

(i)Rotate (90°) 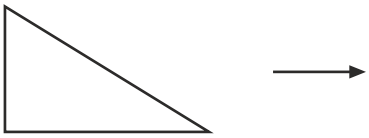 1

(ii)Scale (down) 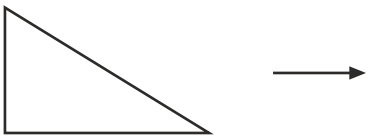 1

(iii)Hatch 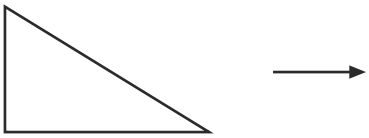 1

(iv)Copy 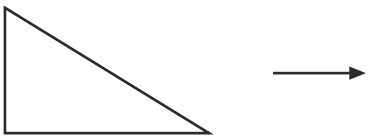 1

(v)Mirror 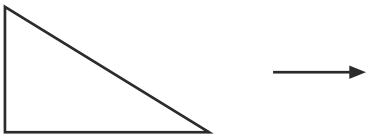 1

(vi)Zoom (out) 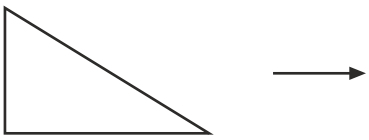 1

(b)State two benefits of using the CAD feature, Library.

Advantage 1 .....
.....
.....

1

Advantage 2 .....
.....
.....

1 (8)

2. (a)An architect wishes to draw the Floor Plan of a house. He has a choice of two scales. Marks

(i)State which two scales are the common scales for drawing a floor plan.

Scale 1 ..... Scale 2 .....… 1

(ii)State two reasons which might influence his choice.

Reason 1 1

Reason 2 .....… 1

(b)Name each of the British Standards symbols shown on the graphic.

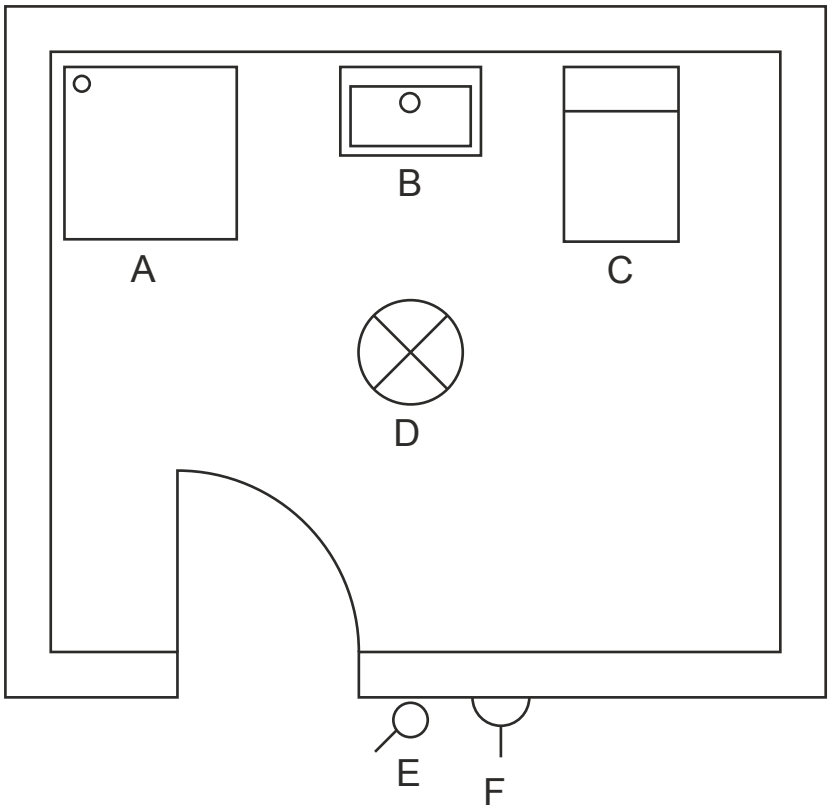

A .....

B .....

C .....

D .....

E .....

F 3

(c)Two incomplete views of a hollow, thick-walled cylinder are shown. Sketch the British Standards line types for centre lines, hidden detail and cutting plane in the appropriate positions. (You may use a straight edge.)

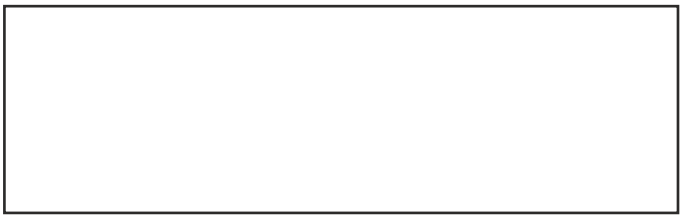

EL EVA TION

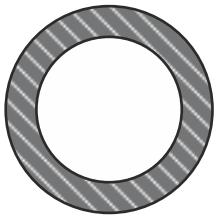

SECTION A-A

3 (9)

Mark

3. (a)(i)Sketch a rectangle 40 mm´ 30 mm in landscape format: include the capital letters ABC, to demonstrate the DTP effect, reverse.

SKETCH 2

(ii)Describe, by means of a sketch, the term text wrap.

SKETCH 1

(b)Describe each of the following DTP terms, using a sketch if required.

Footer 1

Column rule 1

Gutter 1

Box 1

(c)A DTP document is planned in stages. State the stage which follows research.

Stage 1 (8)

Mark

4. (a) (i)Describe what is meant by dimensional tolerancing.

.....
.....
.....

(ii)State two reasons why tolerances are an important feature in manufacturing. 1

Reason 1 .....
.....

Reason 2 1
.....

1

(iii)Show a horizontal linear dimension of 30 mm with a tolerance of +0.15 and -0.25 applied directly to the given graphic, using a recommended method.

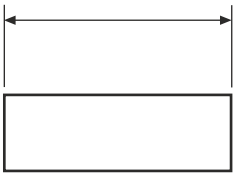

1 (4)

5. Production drawings are used in the Consumer, Engineering and Construction industries.

State a different example of a Production drawing applicable to each industry.

Consumer industry 1
.....
.....

Engineering industry .....
..... 1
.....

Construction industry .....
.....
.....

1 (3)

Mark

6. (a)What is the main purpose of a section?

.....
..... 1

(b)Sketch a simple revolved section.

2

SKETCH

(c)Where shafts, bolts, nuts and screws are cut longitudinally, they normally remain unhatched.

State two other features within longitudinal sections which also are not normally hatched.

Feature 1 1

Feature 2 1

(5)

7. The component below is drawn to a scale of 1:10.

Dimension the drawing, using British Standards, to include:

(i)the overall length; 1
(ii)the overall height; 1
iii)the radius. 1

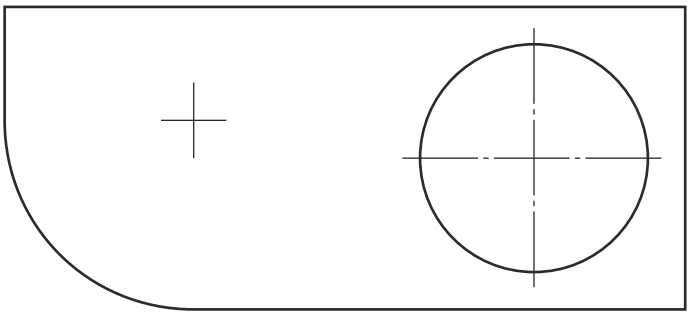

(3)

Mark

8. Preliminary, Production and Promotional graphics are used extensively in the consumer,construction and engineering industries.

Explain the purpose of each type of graphic and give one example of each.

PreliminaryPurpose 1
.....
Example 1

Production Purpose 1
.....
Example 1

PromotionalPurpose 1
.....
Example .....

1 (6)

9. (a)State the British Standard type of sectional view indicated at each drawing.

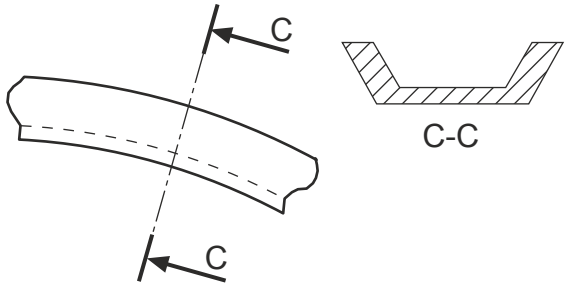

Type of section 1

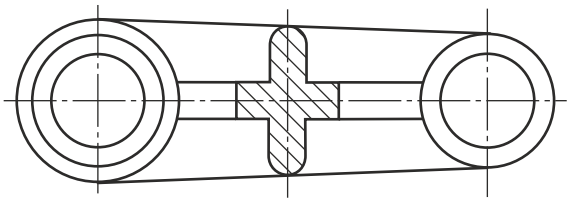

Type of section 1

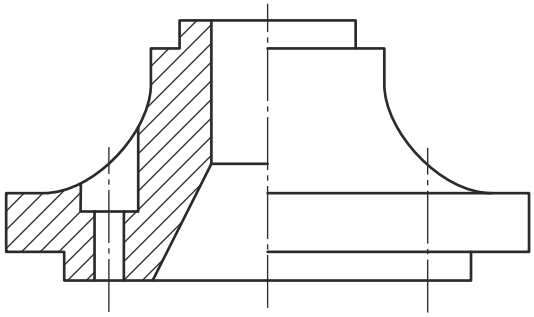

Type of section 1

(b)On the drawings below, sketch the British Standard convention that represents: Marks

(i)a roller bearing; 2

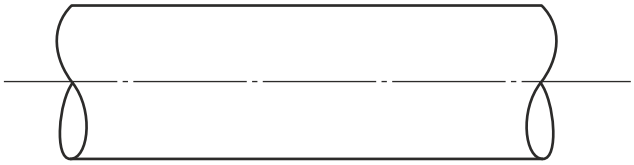

(ii)a line of symmetry. 1

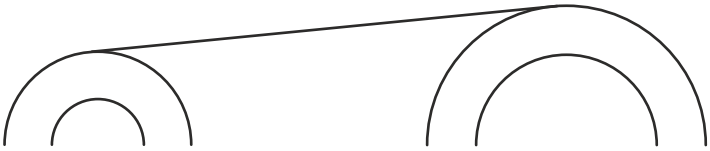

(c)State the type of view indicated at detail A.

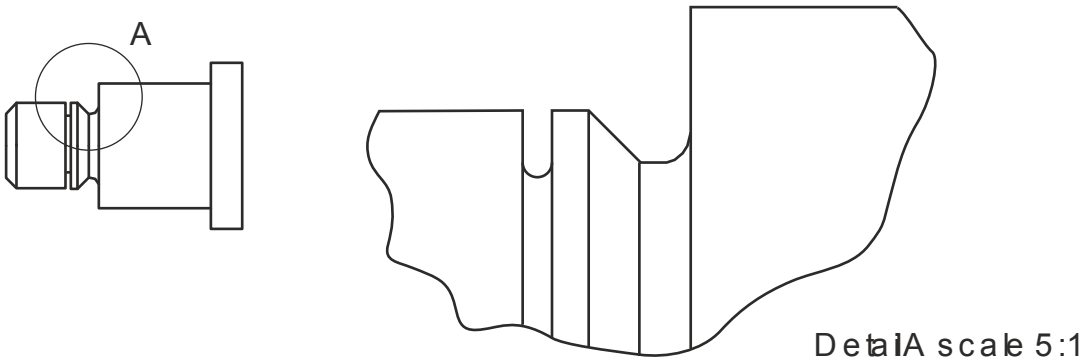

Type of view 2

(d)State the name of component B, respresented by the British Standards convention.

Component B 1

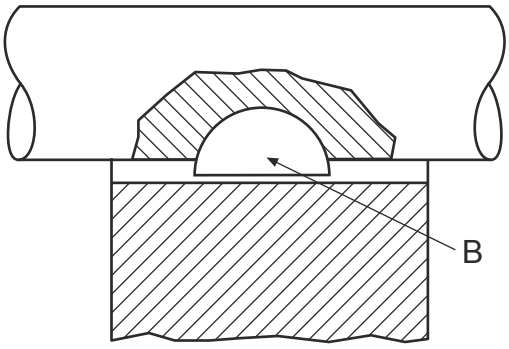

(9)

10. Mark

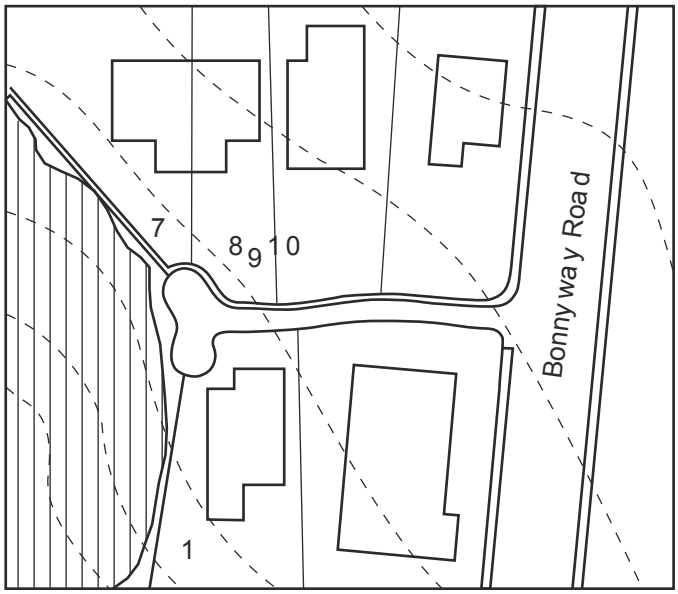

Block Plan (not to scale)

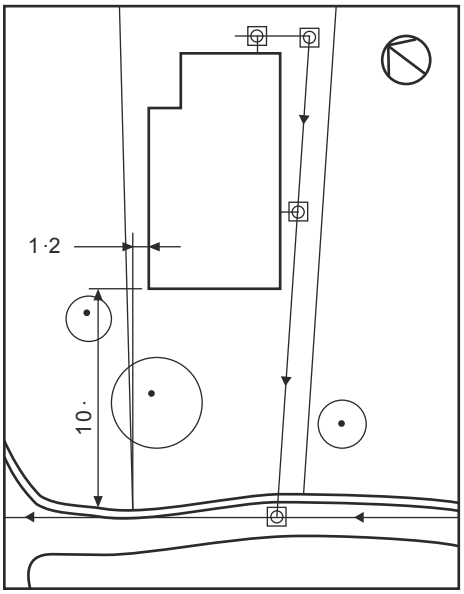

Site Plan (not to

(a)For each of the above building plan types, state an appropriate British Standard scale.

block plan scale 1

site plan scale 1

(b)State three features that commonly appear on each of the two types of given plans;(do not use the same feature more than once).

block plan

feature 1

feature 1

feature 1

site plan

feature 1

feature 1

feature 1

11. There are three stages in designing a Desk Top Published page prior to electronic production. Mark

Complete the information required for stages 2 and 3.

Stage 1 Research Method: Investigate target market and function of proposed document.
Purpose: To generate a document specification.

Stage 2 .....… 1

Method: 1
.....

Purpose: 1
.....

Stage 3 .....… 1

Method: .....
..... 1

Purpose: .....
..... 1

(6)

12. Colour inkjet printers and colour laser printers have different properties.

(a)State two advantages that a colour laser printer would have over a colour inkjet printer.
.....
.....
..... 2

(b)State one advantage that a colour inkjet printer has over a colour laser printer.
.....
.....
1

(3)

Mark

13.

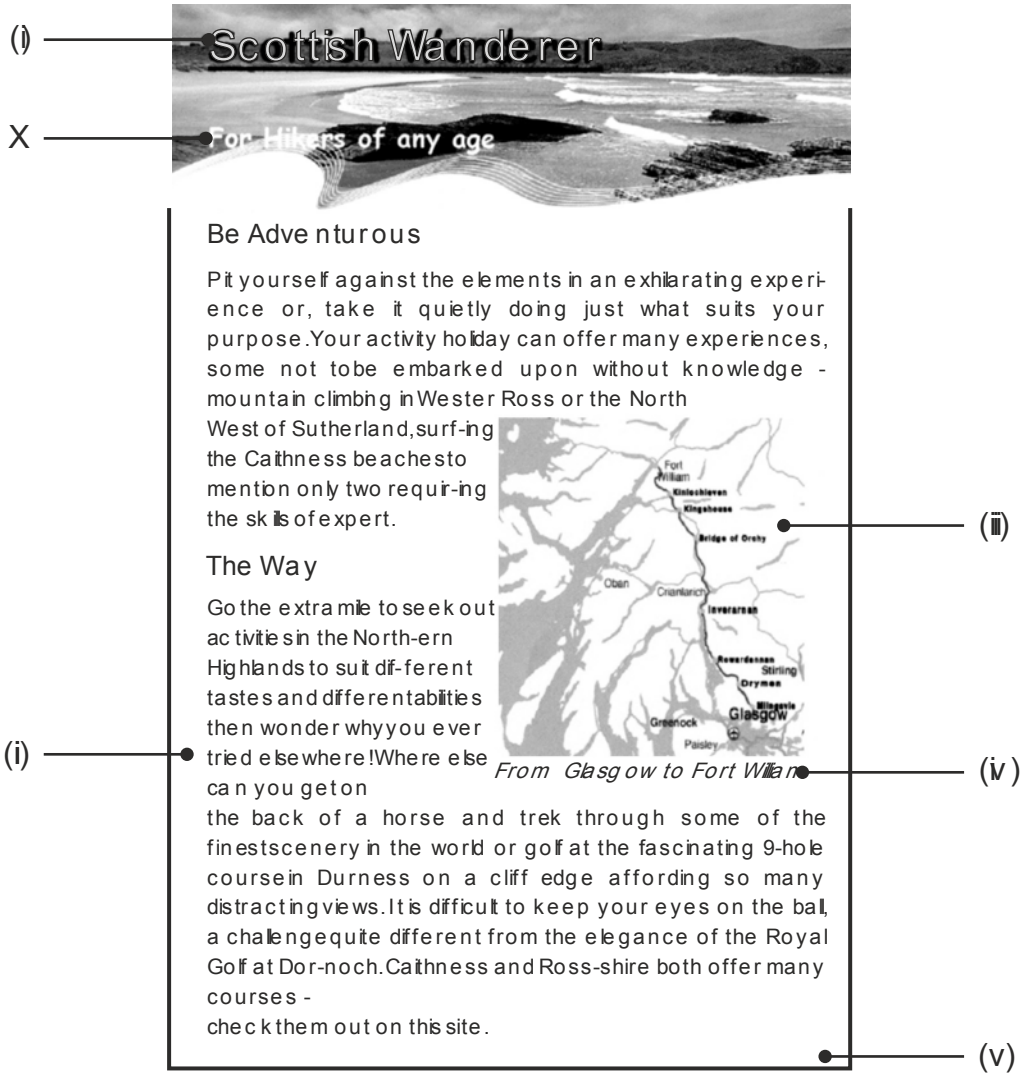

(a) State the desk top publishing terms for each of the numbered elements.

(i) ..... (ii) 2

(iii) ..... (iv) 2

(v) 1

(b) State the term for the effect used on the text at X "For Hikers of any age".

..... 1 (6)

14. (a)Explain clearly what each of the following CAD commands allows the user to do.Sketches may be used to help explain your answers. Marks

(i)Scale .....
.....

(ii)Zoom .....
.....

(iii)Mirror .....
.....

(iv)Pan .....
.....

(v)Rotate .....
.....

(vi)Library .....
.....

(vii)Grid lock/snap .....
.....

(viii)Copy .....
.....

8

(b)Explain the operation in relation to paper and pen movement of the following two output devices.

(i)Drum plotter .....
.....

(ii)Flatbed plotter .....
.....

2

(10

15. (a)State the type of sectional view shown

Marks

(i)

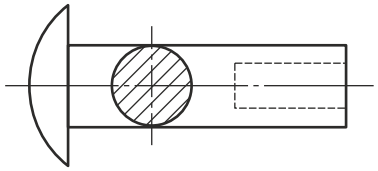

.....

(ii)

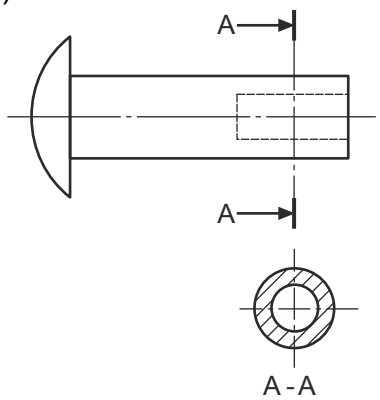

.....

(iii)

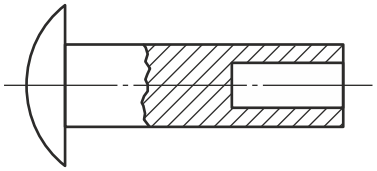

.....

(iv)

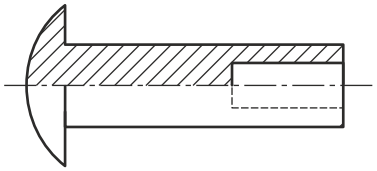

..... 4

(b)State what each of the British Standards conventions shown below

(I)

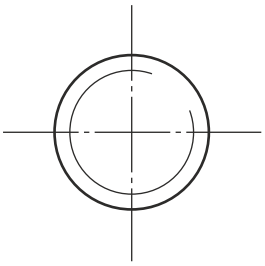

(ii)

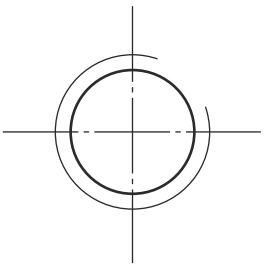

.... 2

(6)

16. A pictorial view of a tap wrench is shown. Six sizes are given. M

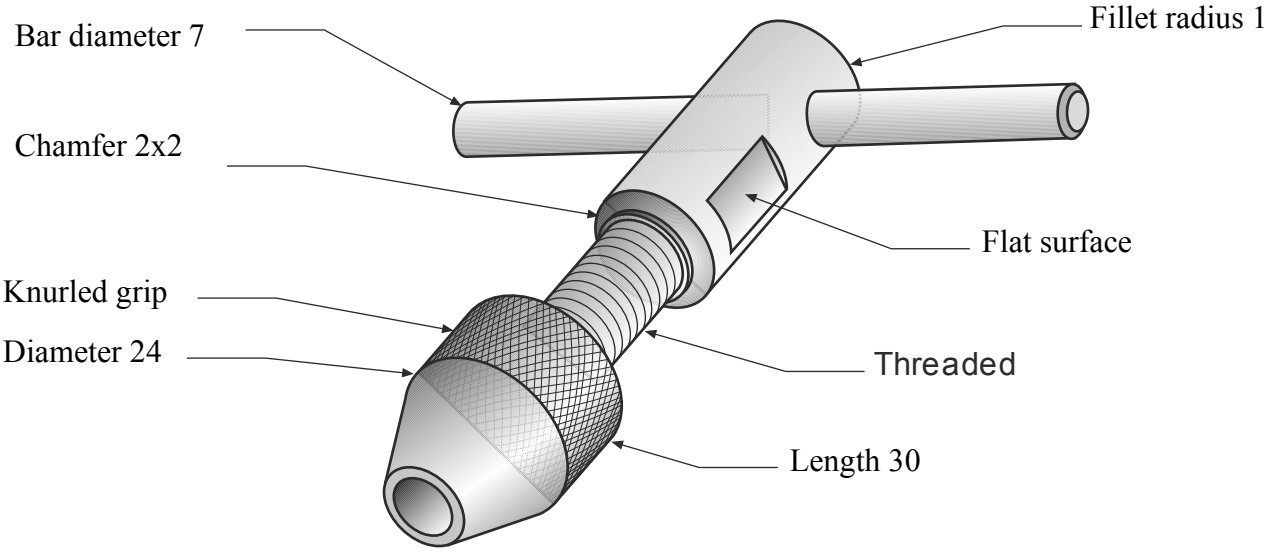

(a)Sketch to British Standards conventions, the six given sizes on the orthographic view below.

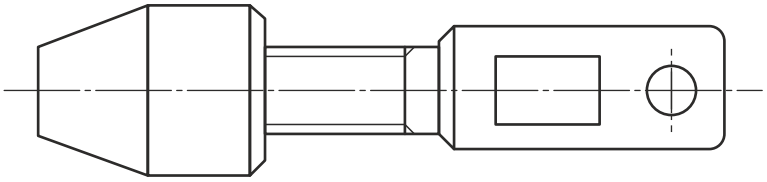

6

(b)Sketch, on the orthographic view above, the British Standards convention to indicate:

(i) the flat surface on the barrel;

(ii) the knurled pattern on the chuck. 2

(8)

17. An example of a desktop published (DTP) safety leaflet is shown.

Marks

(a) State the desktop publishing effect indicated at A.

..... 1

(b) State the page orientation of the leaflet below.

..... 1

(c) State the desktop publishing terms for each of the features (i) to (vi).

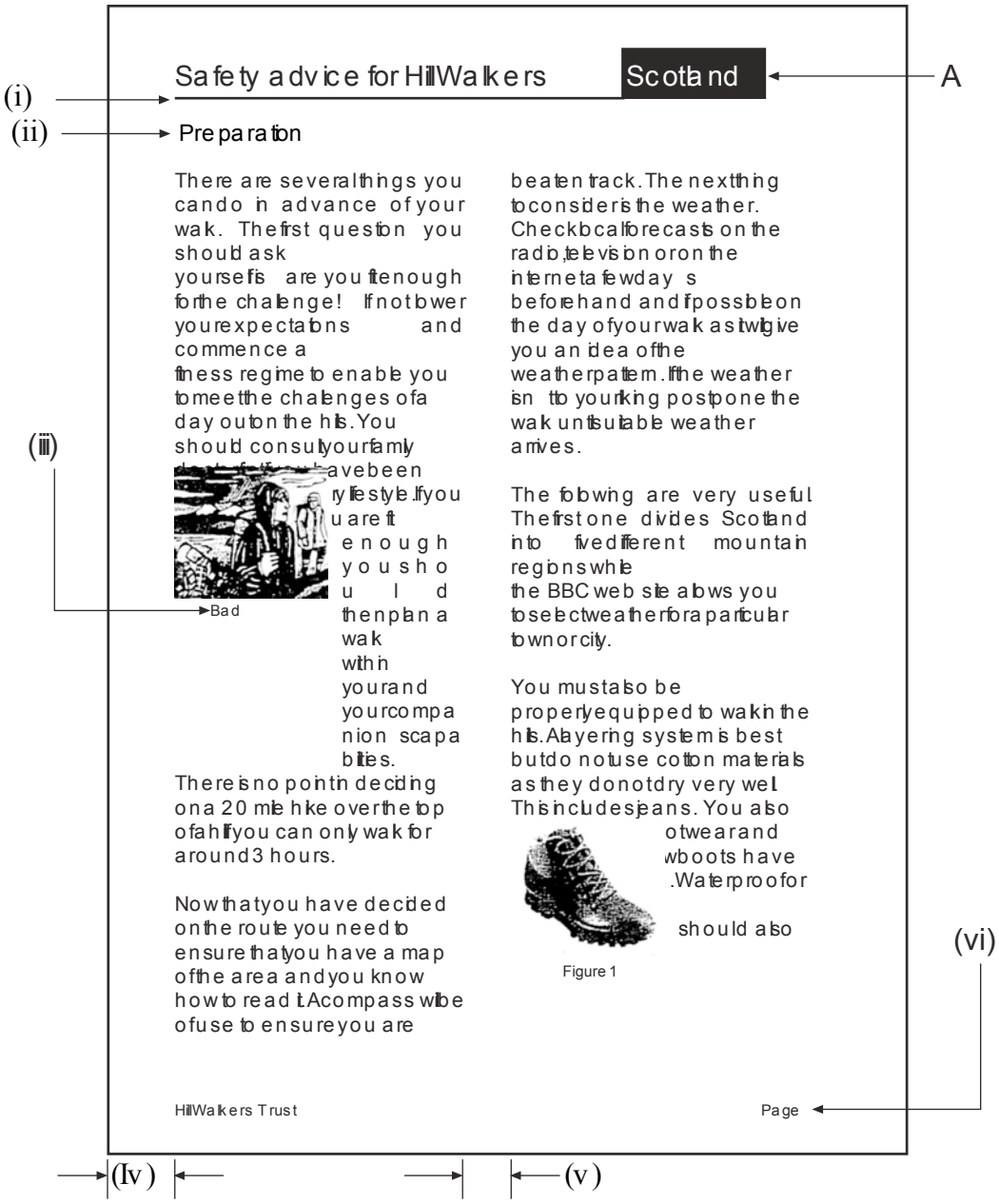

(i) ..... (ii) .....

(iii) ..... (iv) .....

(v) ..... (vi) 6

(8)

M

18. Some of the many different types of graphics used in the construction industry are shown below.
Describe the purpose and state a suitable scale for each of the plans.

(a)Floor plan

Scale .....…....
Description .....
.....

2

(b)Site plan

Scale .....
Description .....
..... 2

(c)Block plan

Scale .....
Description .....
.....

2 (6)

19. Marks

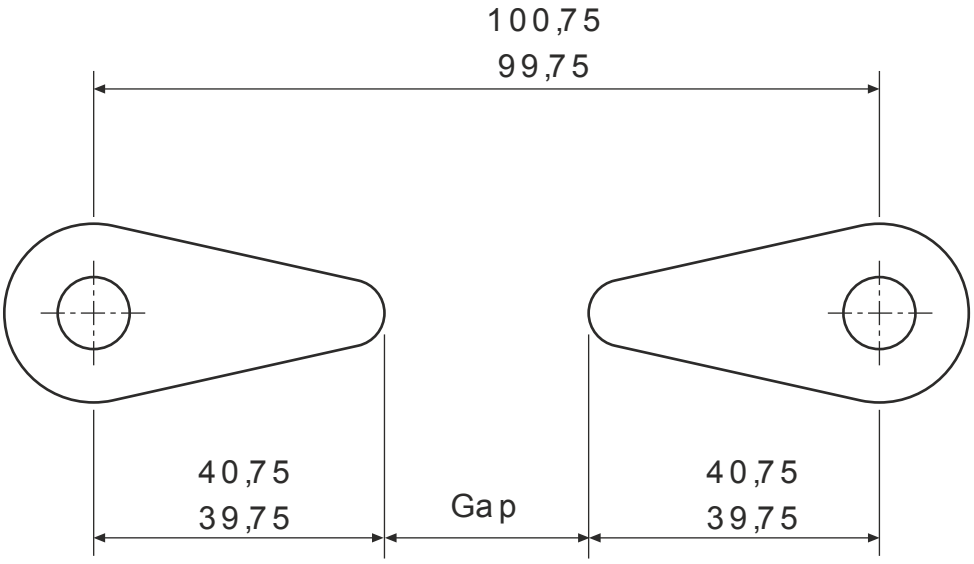

The paddles from a pinball game are shown. The paddles are set at a nominal 100 mm apart centre to centre.

The distance between the pivot centre and the end of the paddle is 40 mm with a tolerance of +0·75 and -0·25 applied.

Calculate the maximam and minimum gap between the paddles.
(Show all relevant calculations.)

(2)

Mark

20. Describe, using sketches if required, the following desk top publishing terms.

Page orientation .....
.....
.....
.....

1

Rule .....
.....
.....
.....

1

Caption .....
.....
.....
.....

1

Gutter .....
.....
.....
.....

1

Reverse .....
.....
.....
.....

1

Header .....
.....
.....
.....

1

Margin .....
.....
.....
.....

1

(7)

Mark

21. (a)State the term used to describe the small annotated sketches used in the initial design stage of a desk top publishing document.

..... 1

(b)State the term used to describe the full size manually produced colour document that would be presented to the client prior to electronic production of a desktop published document.

..... 1

(2)

22. (a)A range of drawing types are used in industry within the categories Preliminary,Production and Promotional.

(i)State the category that an orthographic drawing, showing dimensions and tolerances would be in.

Category .....… 1

(ii)State the purpose of this type of drawing.

Purpose .....… 1

(b)State a type of Promotional graphic commonly used in marketing.

Graphic 1

(3)

23. (a)Orthographic views created in a CAD package are drawn in 2D. State two types of views that would be drawn in 2½D.

View 1 .....… 1

View 2 .....… 1

(b)State the computer hardware that allows:

(i)drawings and text to be sent accurately to another computer; 1

Hardware .....…

(ii)existing photographs to be captured and inserted into a desktop published document;

Hardware .....… 1

(iii)production of a hard copy of a word processed document.

Hardware 1

(5)

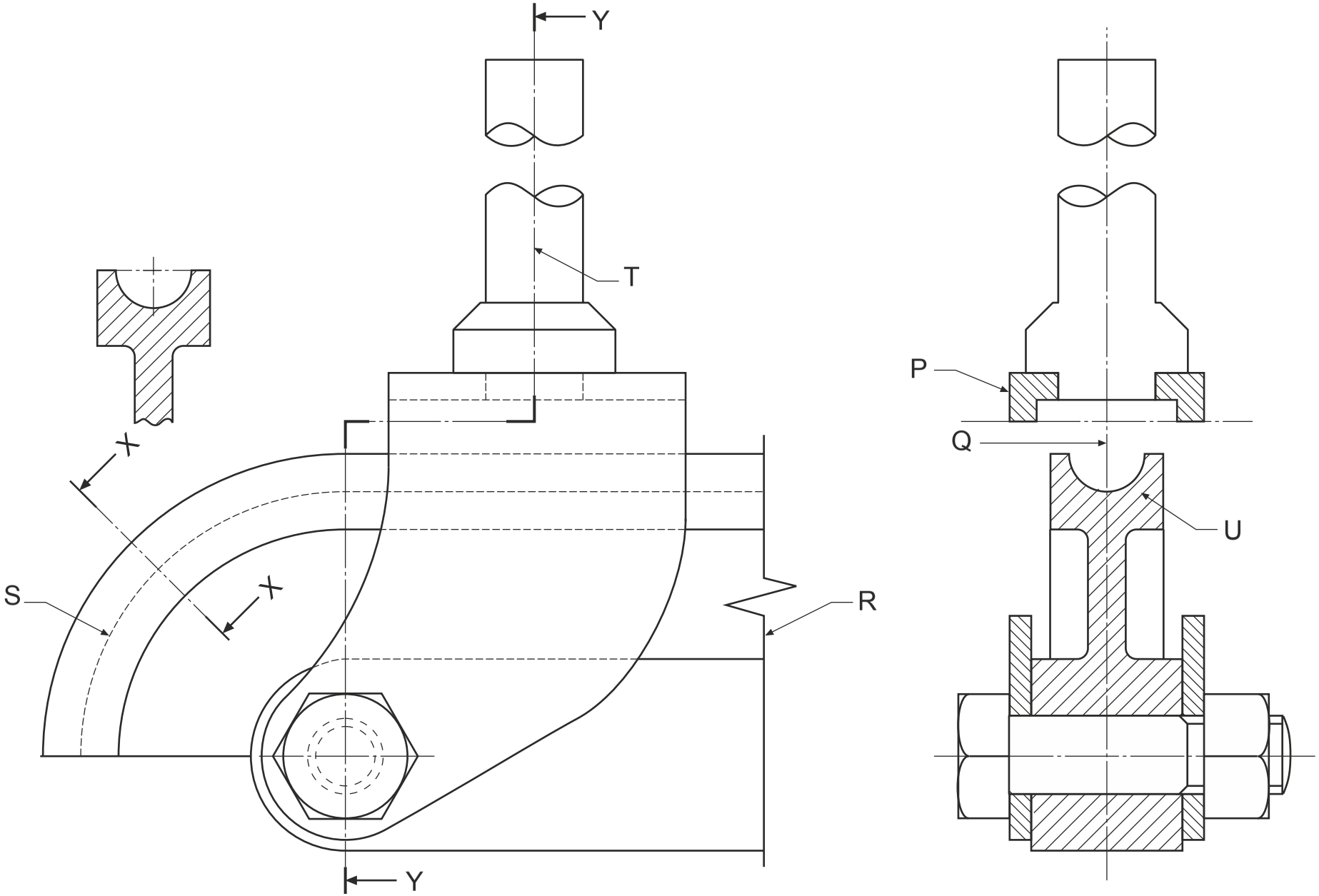

BOX A	1	2	3	4	5 .....

24. The engineering drawing, including the title block, shown opposite is drawn to British Standards. Marks

(a)State the British Standard symbol shown in Box A.

..... 1

(b)State the further five items of information that should be included within the given title box to conform to British Standards.

1. ..... 2. .....
3. ..... 4. .....
5. .....

5

(c)State the British Standard type of sectional view created by:

X-X .....… 1

Y-Y .....… 1

(d)The incomplete list below gives either the Description or the Application of the British Standard line types indicated on the drawing shown on the opposite page.

State the Description or the Application of each line type in order to complete the list. A completed example is given for P.

P Description:Thick, continuous
Application:Visible edges and outlines

Q Description:.....… 1

Application:Centre lines, lines of symmetry

R Description:Continuous thin straight with zigzags

Application:.....… 1

S Description:.....… 1

Application:Hidden outlines and edges

T Description:.....… 1

Application:Cutting planes

U Description:Continuous thin

Application:..... 1

(13

25. (a)State the Illustration and Presentation terms described below. Marks

(i)A colour gradually blending into another colour.

Term .....… 1

(ii)An area of white to show reflected light.

Term .....… 1

(b)Describe tonal scale.

.....
.....
..... 1

(c) Layering is a feature available in some CAD packages.

State two advantages that could be gained when using this feature.

Advantage 1 1
.....

Advantage 2 .....
..... 1

(5)

26. Three methods of dimensioning the position and diameter of holes on a plate are shown below. Marks

(a)State the British Standard term for each method.

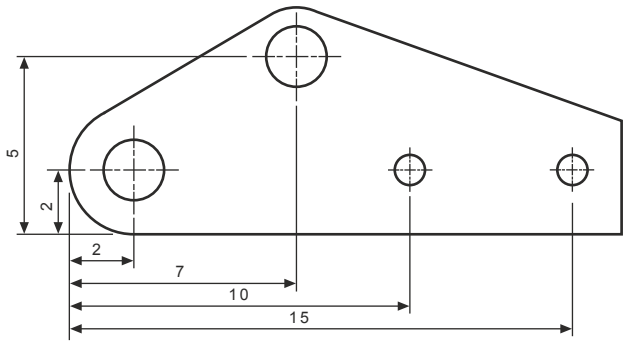

Method 1 1

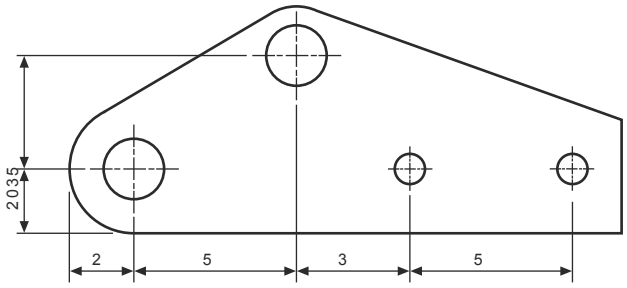

Method 2 1

Hole	X	Y	Ø

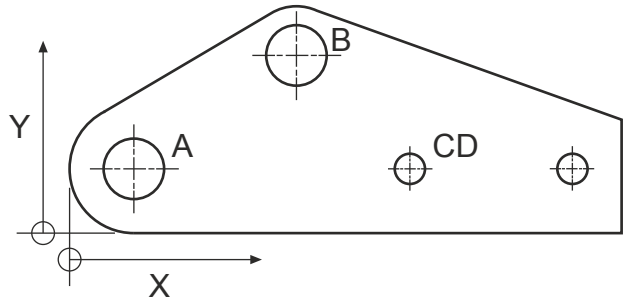

Method 3..... 1

(b)(i)State an advantage of dimensioning using Method 1 over Method 2.

.....

..... 1

(ii)State an advantage of dimensioning using Method 3 over Method 1 and Method 2.

.....

..... 1

(5)

27. (*a*) Shown below are the stages used in drawing the plan of a microchip using a CAD package. State the **single** CAD command used at each

Marks

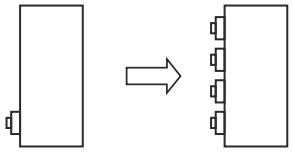

..... **1**

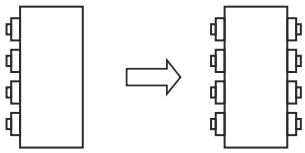

..... **1**

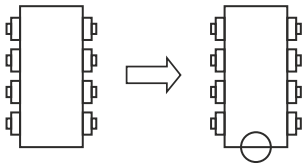

..... **1**

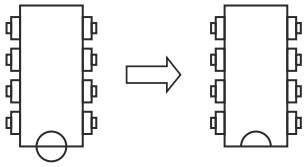

..... **1**

(*b*) (i) State the CAD feature which allows the drawing of the microchip to be saved and used in other circuit diagrams.

..... **1**

(ii) State **one** advantage other than time of using this CAD feature.

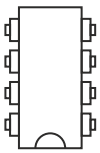

.....

..... **1**

(*c*) (i) State the CAD feature which allows the connections to be revealed or concealed.

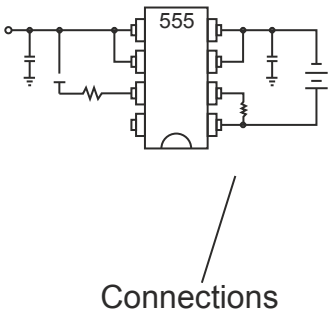

..... **1**

(ii) State **one** advantage other than time of using this CAD feature.

.....

..... **1**

(8)

28. (*a*) State the **two** types of dimensioning shown below at A and B. *Marks*

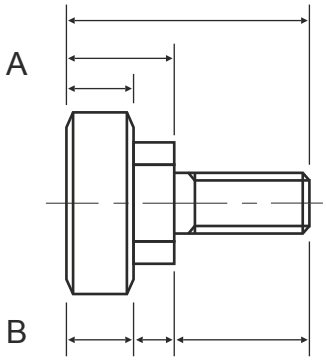

Type A _____

Type B _____ **2**

(*b*) In order to manufacture the component, accurate functional tolerances will have to be applied. Explain why Type A would be preferable.

.....

.....

..... **1**

(*c*) Sketch on the elevation below, to British Standards convention:

(i) the 4 dimensions shown on the pictorial view; **4**

(ii) the flat surface. **1**

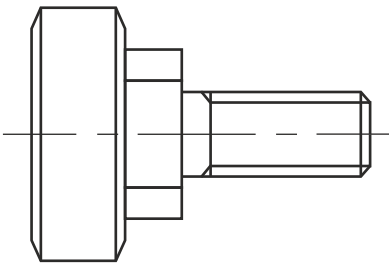

ELEVATION

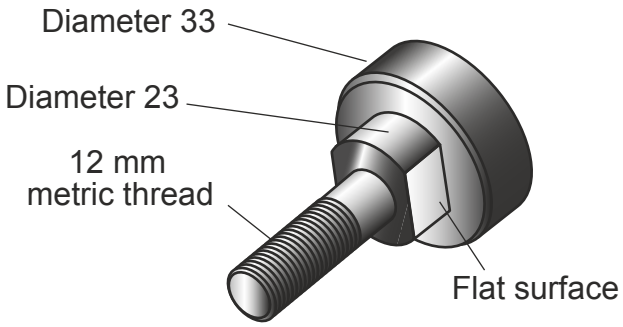

Overall length 50

(8)

29. (*a*)There are three stages in planning a DTP document prior to the production of the final electronic version. Research is the first stage. *Marks*

State **two** further stages in planning a DTP document.

Stage .....

Stage **2**

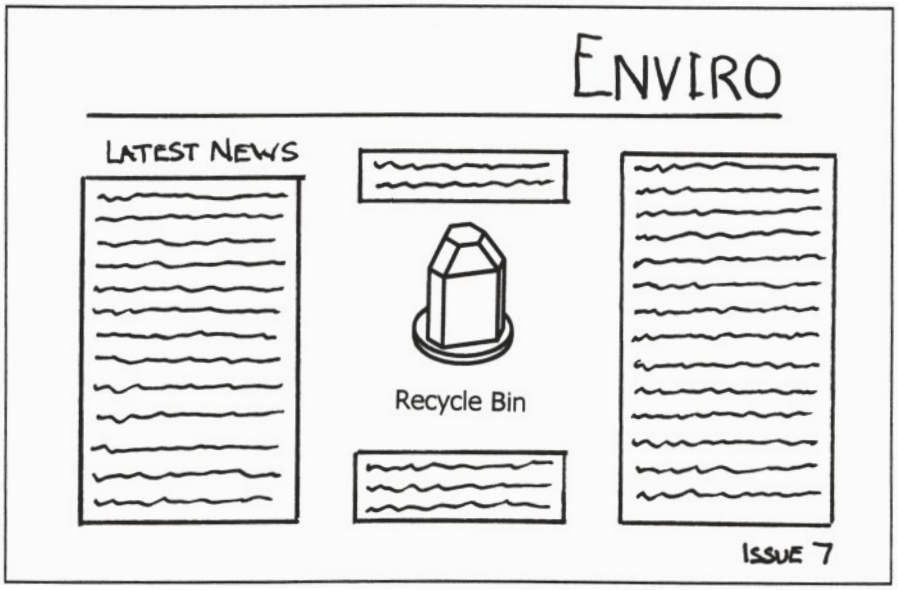

Part of the planning stage is shown above.

(*b*) State the page orientation used in the document above.

..... **1**

(*c*) State the DTP term for the deliberately created clear area to the left of the word ENVIRO.

..... **1**

(*d*) State the DTP term for each of the features (i) to (vi).

(i) ..... (ii) .....

(iii) ..... (iv) .....

(v) ..... (vi) **6**

(10)

30. A **Site Plan** is shown below, not to scale. *Marks*

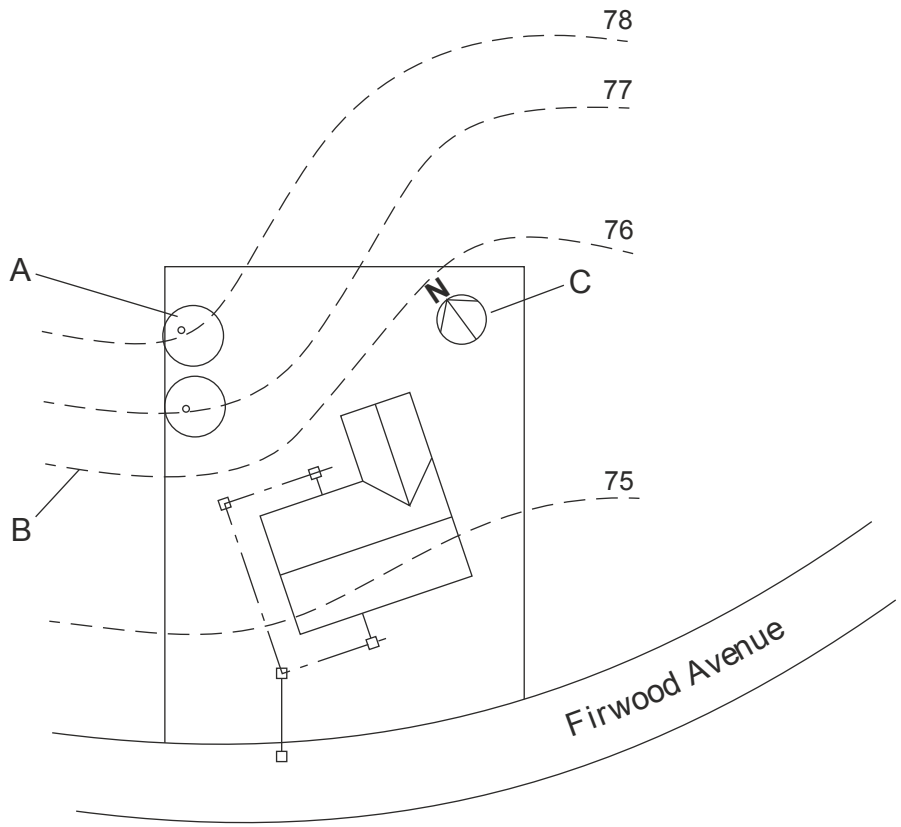

(*a*) State a suitable scale for this type of plan.

..... **1**

(*b*) State the name of the British Standards (BSI) architectural symbols represented at A, B and C.

A .....

B .....

C **3**

(*c*) State the name of **one** other type of architectural building plan.

..... **1**

(5)

Marks

31. (*a*) A drawing contains both a centre line and a visible outline located in the same position. State, according to British Standards, which would be given priority and drawn.

..... **1**

(*b*) The following line descriptions are taken from British Standards.

State the applications for each.

Line Descriptions	**Applications**
Dashed thin line	.....
	.....
Chain thin double dashed	.....
	.....
Continuous thin straight with zigzags	.....
	.....
Continuous thin	.....
	.....

4

(5)

32. (*a*) State the type of section produced by the three cutting planes shown *Marks*

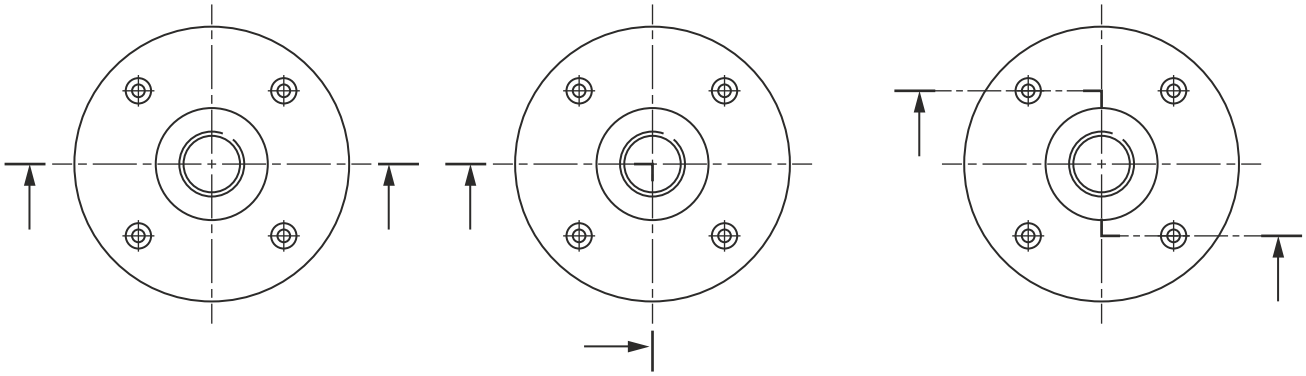

(i) ..... (ii) ..... (iii) **3**

(*b*) State the purpose of producing a section drawing.

.....

..... **1**

(4)

33. An **engineer's office** uses a range of *Preliminary and Production* graphics. *Marks*

Explain the purpose of each **type** of graphic and give **one** example of each.

Preliminary Purpose .....

..... **1**

Example **1**

Production Purpose .....

..... **1**

Example **1**

(4)

2

34. A pictorial view and elevation of a menu holder are shown below.

The location pins each Ø 30 mm are set apart at 400 mm nominal centres.

There are tolerances on both the **sizes and location** of the pins and these are shown on the drawing below.

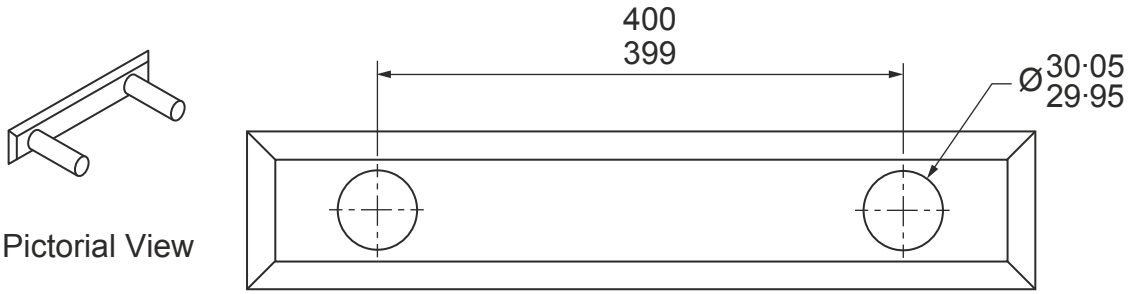

Pictorial View

Elevation

(*a*) Calculate the **maximum** and **minimum** gap between the pins.

Maximum **1**

Minimum **1**

(*b*) State **two** reasons why tolerances are an important feature in manufacturing.

Reason 1 ..... **1**

Reason 2 ..... **1**

(4)

35. A firm of architects have produced a range of building plans for a new house. *Marks*

(*a*) Look at the plans shown below and identify the features indicated.

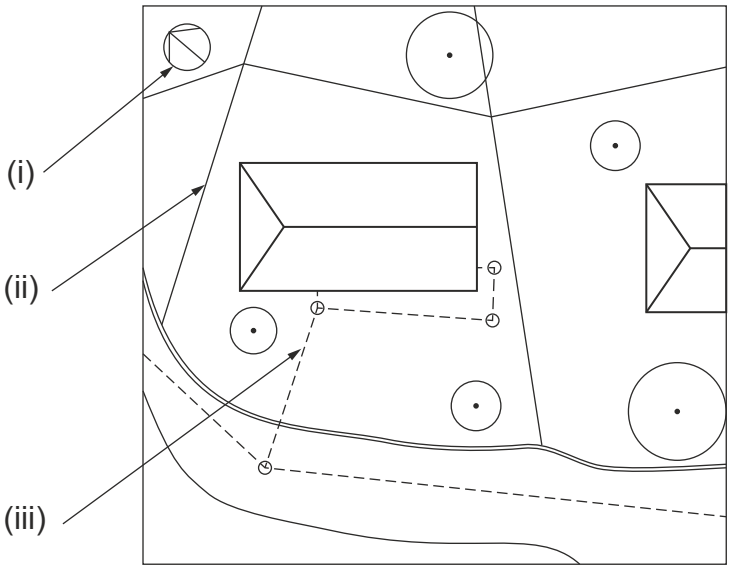

Site Plan (not to

Site plan
Feature

(i) **1**

(ii) **1**

(iii) **1**

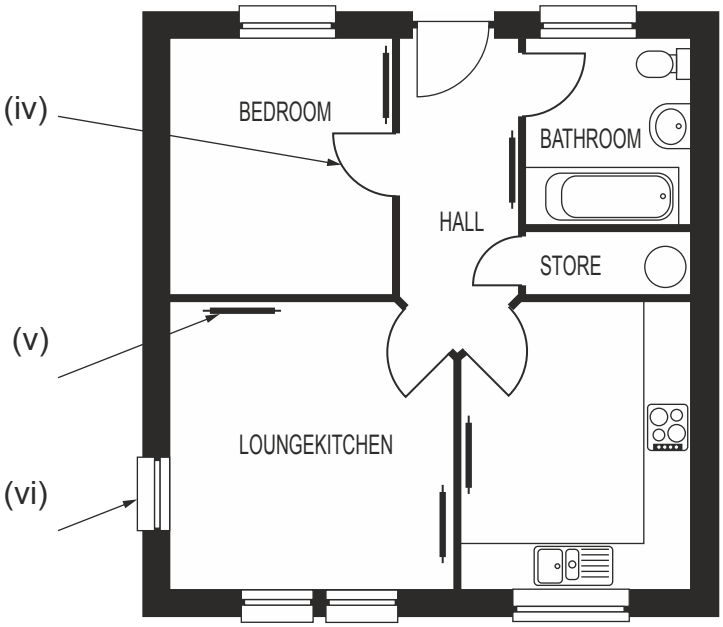

Floor Plan (not to scale)

Floor plan
Feature

(iv) **1**

(v) **1**

(vi) **1**

(*b*) For each of the above building plan types, state an appropriate British Standard scale.

Site plan scale **1**

Floor plan scale **1**

(*c*) Name another type of building plan. **1**

(9)

36. The first issue of a golf club newsletter produced on a DTP package is shown *Marks*

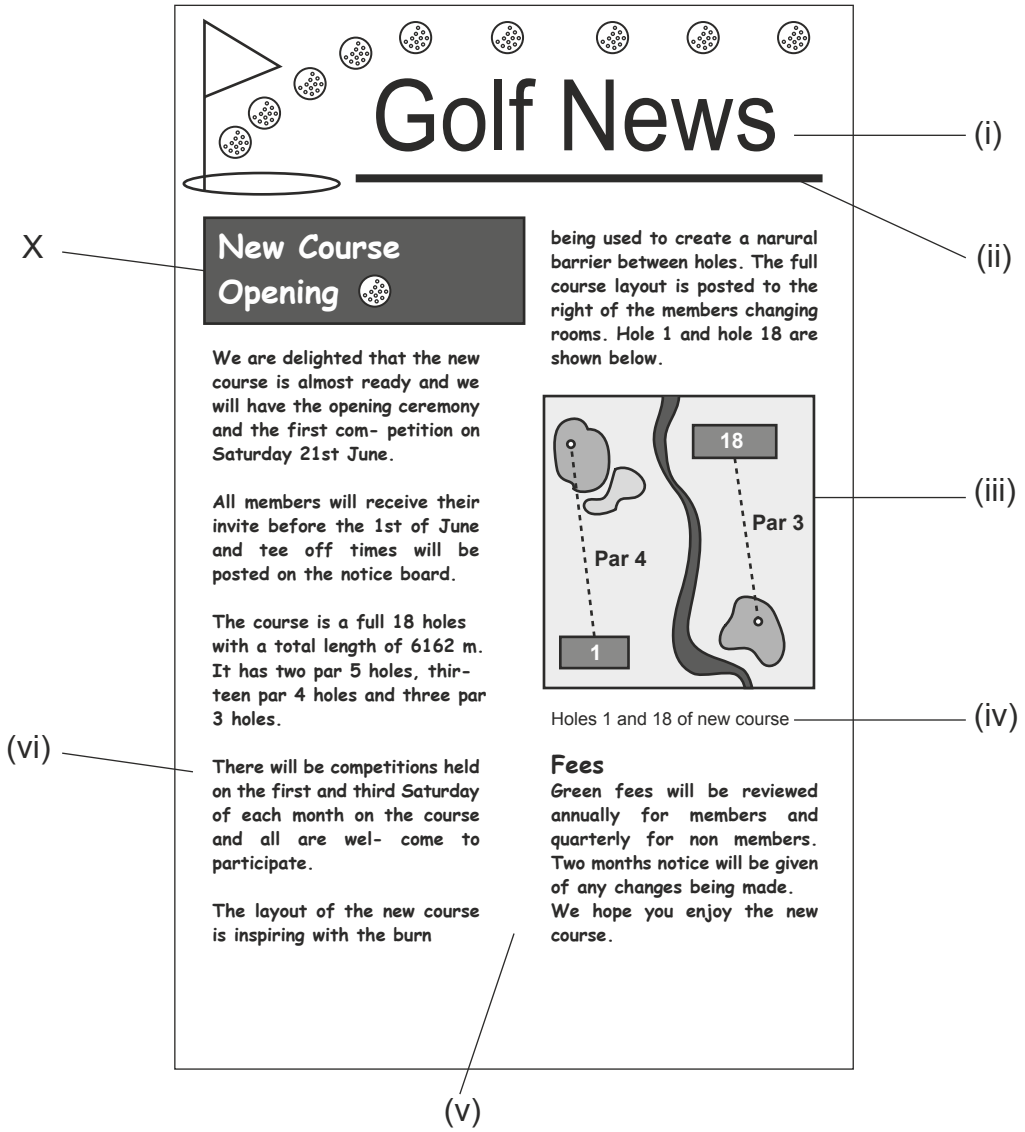

(*a*) State the desktop publishing **terms** for each of the numbered elements.

(i) ..... (ii) **2**

(iii) ..... (iv) **2**

(v) ..... (vi) **2**

(*b*) State the term for the effect used on the text at X " **New Course Opening**" .

..... **1**

(*c*) Add a footer showing " issue1" to the newsletter. **1**

(*d*) State the page orientation of the newsletter.

..... **1**

(9)

37. British Standard conventions are used by the engineering and building industry. *Marks*

(*a*) State the type of sectional view indicated in each

(i)

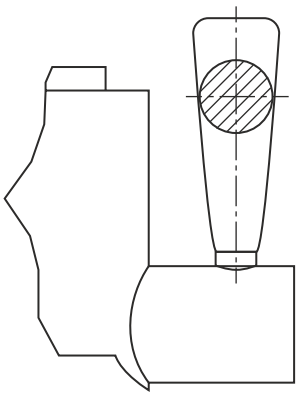

Section view **1**

(ii)

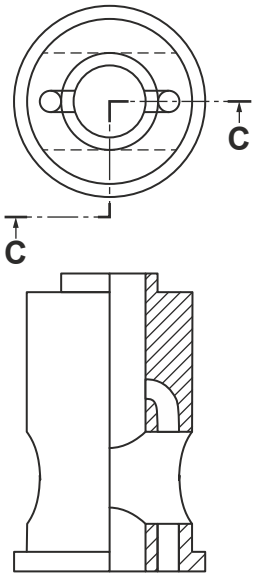

Section view **1**

(*b*) According to **British Standards** the third angle projection symbol is found in the title block of orthographic drawings.

List **four** other pieces of information that a title block should contain.

(i) **1**

(ii) **1**

(iii) **1**

(iv) **1**

(6)

38. A company of clock makers are using a **CAD** package to produce working drawings of their new range of clocks. *Marks*

(*a*) State the single CAD command used in each stage of the clock design below.

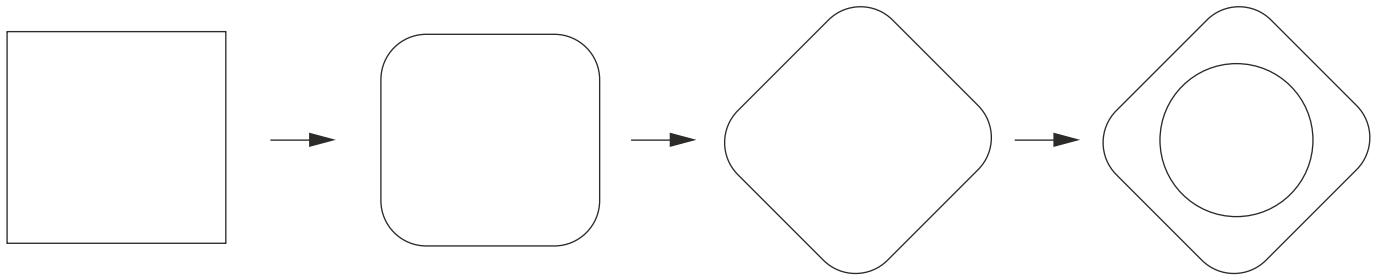

Command _____ Command _____ Command _____

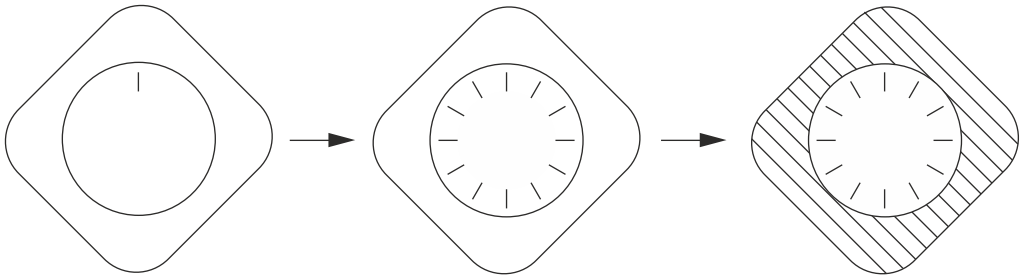

Command _____ Command _____ Command _____

6

(*b*) The clock making company are considering purchasing a colour inkjet or a colour laser printer to produce hard copies of their designs.

State **one** advantage of each type of printer.

Colour Inkjet Printer .....

..... **1**

Colour Laser Printer .....

..... **1**

(8)

Higher Graphic Communication

Homework Book

Bsi/2D CAD/DTP terms

Solutions

Higher Level Graphic Communication 2008

Question 1

Marks

(a)

(i) Rotate (90°)

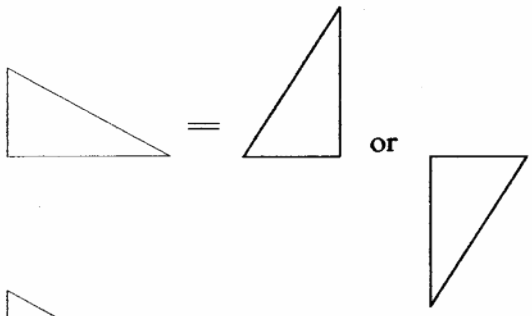

(ii) Scale (down)

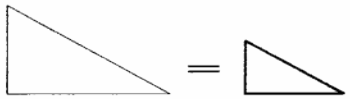

(iii) Hatch

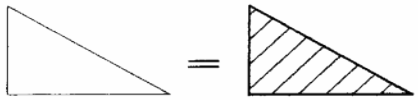

(iv) Copy

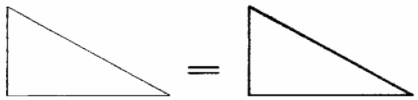

(v) Mirror

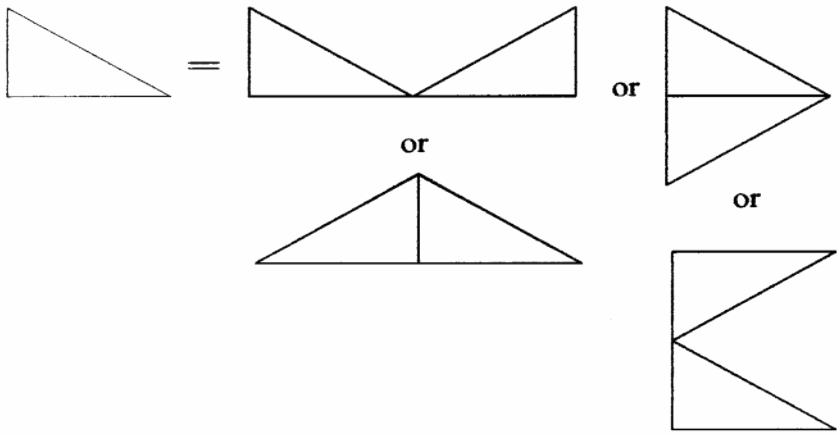

(vi) Zoom (out)

Six answers, one mark for each **6**

Notes:

(b) Benefits: **Marks**

- saves (time) redrawing commonly used parts
- standardisation, quality control eg to British Standards.

Two answers, one mark for each **2**

Question 2

Marks

(a) **(i)** 1:50; 1:100 (both answers required) **1**

(ii) The size of the paper/printer; the size of the house; the degree of detail required

Any two answers – 1 mark for each **2**

(b) **A** shower tray

B wash basin

C water closet; wc

D lamp

E switch

F socket

Two for 1, four for 2, six for 3 **3**

(c)

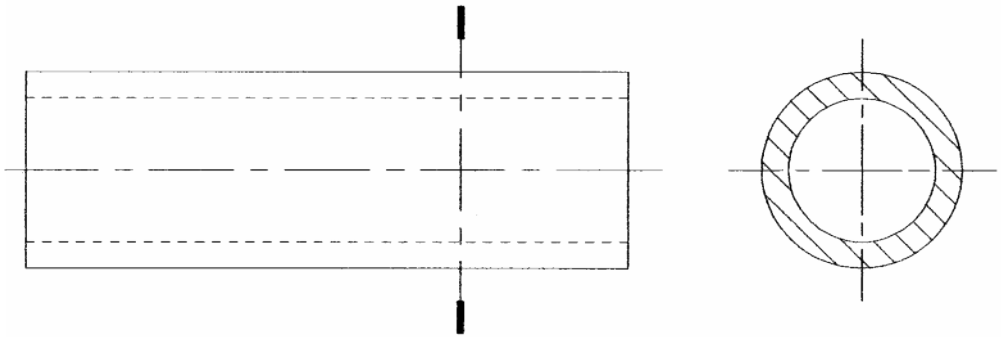

chain thin – 3 lines for 1 mark

dashed thin – 2 lines for 1 mark

chain thin, thick at ends – 1 line for 1 mark **3**

Question 3

Marks

(a) **(i)**

1 mark for reverse
1 mark for landscape

2

(ii)

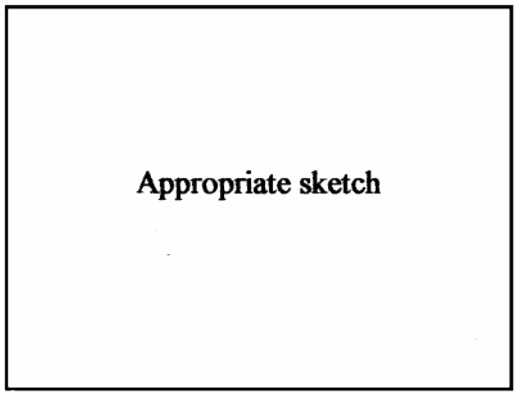

1

(b) *Footer –* a line of text/or page number (folio) placed at the bottom of the page (which is repeated throughout the main body of the document)

Column rule – lines (rules) inserted between columns of text

Gutter – the spaces between columns on a page

Box – graphic/text which is ruled off on all four sides/enclosed within a box

4 answers – 1 mark each (bracketed information not essential) **4**

(c) Thumbnail sketches/thumbnails **1**

Notes:

Question 4

Marks

(a) **(i)** *Dimensional tolerancing* – the practice of applying acceptable/allowable upper or lower limits from the nominal sizes/dimensions. **1**

(ii) Reason 1 – they may affect the function of the product

Reason 2 – they may affect interchangeability of products

2 answers, 1 mark each **2**

(iii)

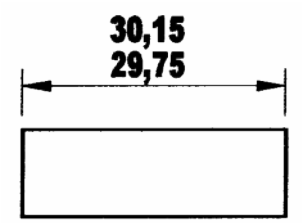

1

Question 5

Marks

Consumer industry: planning diagrams (charts)
(cutting patterns, developments) assembly proofs (camera ready), planometric

Engineering industry: planning diagrams (charts)
(component, assembly, arrangement, installation) orthographic drawings
jig and tool drawings
diagrams (circuit, wiring, electrical, pneumatic)
parts lists, drawing lists

Construction industry: planning diagrams (charts)
(building and structural)
block, site and floor plans
diagrams (plumbing, drainage, electrical, heating)
planning authority/building control drawings
planometric

Any 1 answer from each section but no repeats **3**

Question 6

Marks

(a) To show additional information which otherwise would not be available. **1**

(b) Any acceptable sketch showing a cross section of an elongated form or object rotated towards the plane of projection to show its shape or contour with no elevation lines running across.

For any acceptable sketch, fully correct, of quality; 2 marks
For any acceptable sketch to show the concept, with a minor flaw or lesser quality; 1 mark **2**

(c) Ribs, webs, spokes, voids, key, keyway, thin material, washer pins, rivets, bearings, stud

Any 2 answers for 1 mark each **2**

Notes:

Question 7

Marks

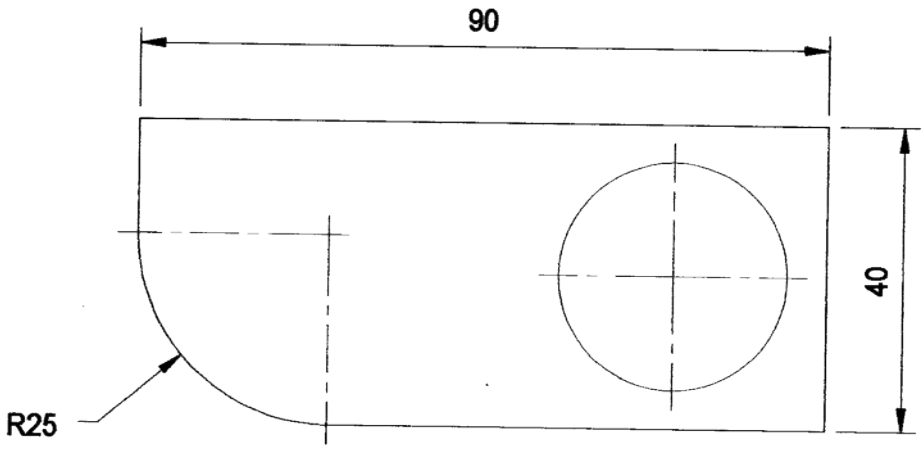

All 3 correct identification of locations for 1 (lower and left overall dimensions acceptable).
Linear dimensions correct to BS for 1 – position of dimension, projection line gap, solid arrows.
Radius dimension correct to BS for 1 – as shown or from centre to circumference with size aligned. **3**

Question 9

			Marks
Preliminary	Purpose	To convey ideas to clients etc quickly and clearly, to assist in the analysing and planning of the design process or similar.	**1**
	Example	Sketches, dimensional, orthographic or investigative, planning charts, graphs, thumbnails, market research or similar.	**1**
Production	Purpose	To allow objects to be manufactured accurately, to provide accurate information.	**1**
	Example	Orthographic, isometric, oblique, sectional, exploded, assembly, block, site, floor and gantt chart, or similar	**1**
Promotional	Purpose	Brings peoples attention to or highlights a product or special feature of a product, to inform public about product, to sell, to advertise, or similar.	**1**
	Example	Advert, display, charts, graphs, model, brochures, presentations, planometric or perspective sketches.	**1**
		Total marks	**6**

Notes:

Question 10

			Marks
(a)	Type of section	Removed Section	**1**
	Type of section	Revolved Section	**1**
	Type of section	A Half Sectional View	**1**

(b) (i)

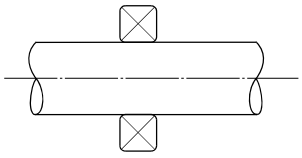

2 squares for 1 mark (fillets not required) **1**

Diagonals for 1 mark (only one set required) **1**

(ii)

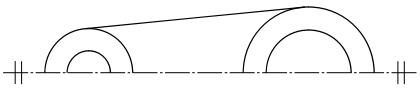

Centre line and 2 pairs of parallel lines required for 1 mark. **1**

(c)	Type of view at **A**	Enlarged (scale) Partial View, 1 mark for *Enlarged* 1 mark for *Partial View*	**2**
(d)	Component **B**	Key, for 1 mark	**1**
		Total marks	**9**

Notes:

Question 11

			Marks
(a)	block plan:	1:1250 or 1:2500	**1**
	site plan:	1:250 or 1:200 or 1:500	**1**
(b)	block plan features;	Road, street or road name (accept actual name), paths, neighbouring buildings, plot number, field, outline of building, contours. Any 3 for 1 mark each	**3**
	site plan features;	Road, paths, trees or shrubs (but not both), outline of building, roof line, drainage, inspection hatches (accept manholes), location of building (accept dimensions), north point. Any 3 for 1 mark each.	**3**

Notes: ensure that features are mentioned only once for full marks.

Total marks **8**

Notes:

Question 12

		Marks
Stage 2	Thumbnails	
Method	Sketches/sketching	**1**
Purpose	Developing, recording, comparing ideas or page layouts 1 mark for any of the above	**1**
Stage 3	Working Rough (accept visuals)	**1**
Method	Drawn, fully sized image	**1**
Purpose	To establish the position and sizes of the component parts of a document, eg margins, gutters, graphics etc. To enable electronic version of the document to be produced. 1 mark for any of above or similar answer	**1**

Total marks **6**

Notes:

Do not accept answer that implies that the Rough is prepared for the client.

Question 13

			Marks
(a)	Advantages Laser	Faster, sharper graphics, greater buffer memory, more cost effective for large print runs, quieter.	
		Any 2 answers, 1 mark each	**2**
(b)	Advantages Inkjet	Cheaper to buy; low cost cartridges.	
		Any answer, 1 mark	**1**
		Total marks	**3**

Notes:

Question 14

			Marks
(a)	(i)	Headline	**1**
	(ii)	Margin	**1**
	(iii)	Graphic/Image	**1**
	(iv)	Caption	**1**
	(v)	Footer	**1**
(b)	Effect at X:	Reverse (white on black)	**1**
		Total marks	**6**

Notes:

Question 15

				Marks
(a)	**(i)**	SCALE:	To reduce or enlarge an object or objects.	**1**
	(ii)	ZOOM:	To move into or out of a drawing to show more detail or to see the bigger picture.	**1**
	(iii)	MIRROR:	To reflect an image or drawing about an axis.	**1**
	(iv)	PAN:	To shift the location of the view point of the drawing, without zooming in or out	**1**
	(v)	ROTATE:	Turns an image or drawing about a specified point.	**1**
	(vi)	LIBRARY:	To use or store commonly used parts for use in future drawings.	**1**
	(vii)	GRIDLOCK/SNAP:	Attaches the ends of a line to a grid or specific point.	**1**
	(viii)	COPY:	Duplicates an object or drawing.	**1**
(b)	**(i)**	Drum plotter:	Paper moves backwards and forwards over the drum in the X axis, the pen moves across the drum in the Y axis.	
	(ii)	Flatbed plotter:	Paper is fixed, pen moves in both X and Y axis.	**2**
			Total marks	**10**

Question 16

			Marks
(a)	**(i)**	Revolved Section.	
	(ii)	Removed Section.	
	(iii)	Local or Part Section.	
	(iv)	Half Section.	**4**
(b)	**(i)**	External, outer or male thread.	
	(ii)	Internal or female thread.	**2**
		Total marks	**6**

Question 17

Marks

(a)

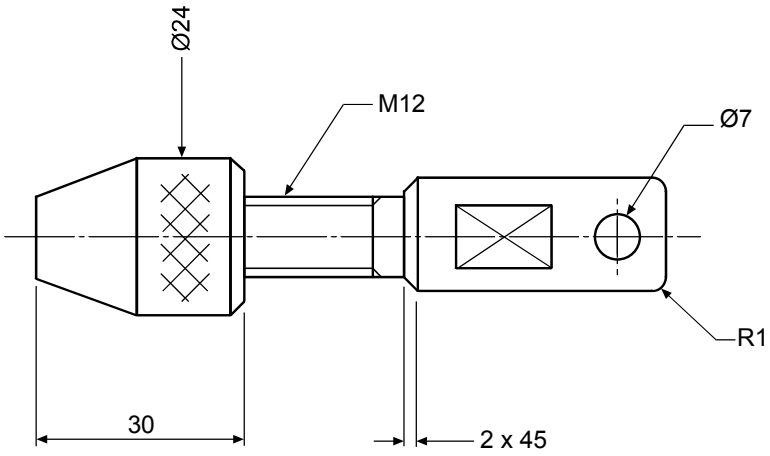

6

(b) **2**

Notes: **Total marks** **8**

Only BS 8888 accepted
Dimension lines and leaders, 6 of (1 for 1, 3 for 2, 4 for 3, 6 for 4)
Text correctly positioned (2 for 1, 6 for 2)

Question 18

			Marks
(a)	Reverse or white on black		
(b)	Portrait		**1**
(c)	**(i)**	Rule	
	(ii)	Sub Heading	
	(iii)	Caption	
	(iv)	Left hand margin	
	(v)	Gutter	
	(vi)	Folio/Footer	**6**

Question 19

			Marks
(a)	Scale:	1:50, 1:100.	
	Description:	To show an internal view of the house from above. A sectional Plan to show internal details.	**2**
(b)	Scale:	1:200, 1:250, 1:500.	
	Description:	To show the site boundary and the outline of the new building.	**2**
(c)	Scale:	1:1250, 1:2500.	
	Description:	To identify the location of the site within its surroundings. To show the local area around the site.	**2**
		Total marks	**6**

Notes:

Question 20

	Marks
Maximum gap	
= 100·75 - (39·75 + 39·75)	
= 100·75 – 79·5	
= 21·25	
Minimum gap	
= 99·75 – (40·75 + 40·75)	
= 99·75 – 81·5	
= 18·25	**2**
Total marks	**2**

Question 21

		Marks
Page orientation:	Description of landscape and portrait.	**1**
Rule:	Line below text or between columns.	**1**
Caption:	Text below a graphic usually giving a description.	**1**
Gutter:	Gap between columns of text.	**1**
Reverse:	White text on a black background.	**1**
Header:	Text at the top of a page, repeated throughout the document.	**1**
Margin:	The area of white space at the outside of a printed page.	**1**
	Total marks	**7**

Notes: The question asks for a **description**, sketches should aid understanding of the text, not replace it.

Question 22

		Marks
(a)	Thumbnails.	**1**
(b)	Visuals or working roughs. Accept: rough layout.	**1**
	Total marks	**2**

Question 23

				Marks
(a)	**(i)**	Category:	Production.	**1**
	(ii)	Purpose:	To provide information (not just sizes, dimensions or tolerances) needed to manufacture an object.	**1**
(b)	Graphic:	Any chart, graph, flyer, banner, poster, business card, etc.		**1**
			Total marks	**3**

Question 24 **Marks**

(a) View 1,2: Isometric, Oblique, any Perspective, Planometrics. **Not** sketches.
1 mark for each correct view. **2**

(b)	**(i)**	Hardware	Modem.	Accept: router.	**1**
	(ii)	Hardware	Scanner.	(Digital camera, **not** digitizer.)	**1**
	(iii)	Hardware	Any **type** of printer (not plotter, or just printer).		**1**

Total marks **5**

Question 25

Marks

(a) Box A Third Angle Orthographic Projection Symbol. **1**

Accept: Projection symbol, Third Angle projection.

(b) Name, Title of drawing, Scale, Date, Tolerances, Title, Drawing number.

Accept: material, surface finish. **5**

(c) X – X Removed section. **1**

Y – Y Section in more than one parallel plane, stepped section. **1**

(d)	P	Description:	***Thick, continuous.***	
		Application:	***Visible edges and outlines.***	
	Q	Description:	**Chain Thin.**	**1**
		Application:	*Centre lines, lines of symmetry*.	
	R	Description:	*Continuous thin with zigzags.*	
		Application:	**Limits of partial or interrupted views.**	**1**
	S	Description:	**Dashed thin.**	**1**
		Application:	*Hidden outline and edges.*	
	T	Description:	**Chain thin, thick at ends.**	**1**
		Application:	*Cutting planes.*	
	U	Description:	*Continuous thin.*	
		Application:	**Dimensions, projection, leader lines, hatching, outline of revolved sections, short centre lines and imaginary intersections.**	**1**

Total marks **13**

Question 26 **Marks**

(a)	**(i)**	Term	Colour gradient.	**1**
	(ii)	Term	Highlight.	**1**
(b)	Tonal Scale:		The gradual transition between light and dark (colour or grey).	**1**
(c)	Advantage:		Avoids clutter, separate parts of the drawing can be printed individually, parts of the drawing can be 'turned off' to allow greater detail to be displayed, allows different parts of the drawing to be allocated line types, line thickness or colour. Any two, one mark each.	**2**
			Total marks	**5**

Question 27 **Marks**

(a)	Method 1:		Parallel dimensioning.	**1**
	Method 2:		Chain dimensioning.	**1**
	Method 3:		Coordinate dimensioning.	**1**
(b)	**(i)**	Advantage:	Inaccuracies or tolerances are not accumulated, avoiding large errors.	**1**
	(ii)	Advantage:	Reduces clutter within the drawing, makes the drawing clearer.	**1**
			Total marks	**5**

Question 28 **Marks**

(a)	(i)	Rectangular array, Box array, Linear, Multiple copy.	**1**
	(ii)	Mirror.	**1**
	(iii)	Circle.	**1**
	(iv)	Trim, Break.	**1**
(b)	(i)	Library.	**1**
	(ii)	Standardises parts, quality control, to British Standards.	**1**
(c)	(i)	Layer , Layering.	**1**
	(ii)	Ease of editing, reveal or conceal parts, allows different parts to be printed.	**1**
		Total marks	**8**

Question 29

			Marks
(a)	Type A	Parallel.	**1**
	Type B	Chain.	**1**
(b)	Type A would avoid the accumulation of tolerances (or similar explanation).		**1**

(c)

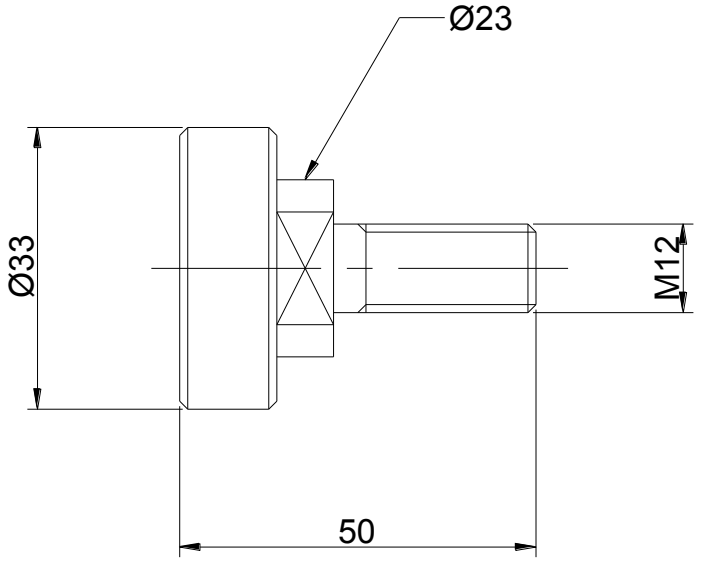

(i)	Four dimensions 1 mark for each. Accept only BS arrowheads.	Length 50	**1**
		Dia 33	**1**
		Dia 23	**1**
		M 12	**1**
(ii)	Flat surface to BS.		**1**
		Total marks	**8**

Question 30		**Marks**
(a) Thumbnails. Working roughs (roughs, visuals).	1 mark for each.	**2**
(b) Landscape.		**1**
(c) Whitespace.		**1**
(d) (i) Sub heading.		**1**
(ii) Rule.		**1**
(iii) Footer.		**1**
(iv) Gutter.		**1**
(v) Column, Column width.		**1**
(vi) Caption.		**1**
	Total marks	**10**

Question 31	**Marks**
(a) Scale 1:250, 1:500, 1:200.	**1**
(b) A Tree/Existing tree. (Not proposed tree).	**1**
B Contours.	**1**
C North Symbol, North point, North.	**1**
(c) Floor Plan, Block Plan (accept *location*) - either for 1 mark.	**1**
Total marks	**5**

Question 32			**Marks**
(a)	The **visible outline** would take priority.		**1**
(b)	(i)	Hidden detail.	**1**
	(ii)	Fold lines, limits of movement, bend lines.	**1**
	(iii)	Limits of a partial or interrupted view. (Accept description).	**1**
	(iv)	Dimension lines, hatching, projection, construction lines.	**1**
		Total marks	**5**

Question 33			**Marks**
(a)	(i)	Full section.	**1**
	(ii)	Half sectional view.	**1**
	(iii)	Section in more than one plane, stepped section.	**1**
(b)		To see more clearly what previously hidden parts would look like. To clearly show internal detail, to add clarity. (Accept similar answer).	**1**
		Total marks	**4**

Question			Expected Answer/s		Max Mark	Additional Guidance
34			*Preliminary* **Purpose:** To convey ideas to clients etc quickly and clearly, to assist in the analysing and planning of the design process or similar. **Example:** Dimensional sketches (2 or 2 ½D), investigative sketches, planning charts, graphs, thumbnails, market research. Any other reasonable answer. *Production* **Purpose:** To provide precise information, to allow objects to be manufactured accurately. **Example:** Orthographic, isometric, oblique, sectional, exploded, assembly, block, site, floor, flow, and gantt chart. Any other reasonable answer.	(1) (1) (1) (1)	**4**	
					4	

Question			Expected Answer/s	Max Mark	Additional Guidance
35	**a**		Maximum 400 - 29·25 = 370·05mm (1) Minimum 399 − 30·05 = 368·95mm (1)	**2**	
	b		Reasons: • Cost, the more accurate an item needs to be, the higher the cost • Time to produce, the more accurate an item, the longer it will take • Affects the function of the product • Affects interchangeability of product Any two from above or similar. 1 mark for each	**2**	
				4	

Question			Expected Answer/s	Max Mark	Additional Guidance
36	**a**	**i**	North Symbol	**1**	
		ii	Plot Boundary	**1**	
		iii	Drainage	**1**	
		iv	Door	**1**	
		v	Radiator	**1**	
		vi	Window	**1**	
	b		Site plan scale 1:250 1:200 1:500 (1) Floor plan scale 1:50 1:100 (1)	**2**	
	c		Type of plan Block	**1**	
				9	

Question			Expected Answer/s	Max Mark	Additional Guidance
37	**a**	**i**	Headline	**1**	
		ii	Rule	**1**	
		iii	Graphic	**1**	
		iv	Caption	**1**	
		v	Gutter	**1**	
		vi	Margin	**1**	
	b		Reverse	**1**	
	c		Footer showing “issue 1” in bottom margin of the newsletter.	**1**	
	d		Portrait	**1**	
				9	

Question			Expected Answer/s	Max Mark	Additional Guidance
38	**a**	**i**	Revolved Section	**1**	
		ii	Half Section	**1**	
	b		Name Title of drawing Scale Date Tolerances Drawing number Material Surface finish Type of drawing Accept any four from the above list, 1 mark each	**4**	
				6	

Question			Expected Answer/s	Max Mark	Additional Guidance
39	**a**		Fillet (1) Rotate (1) Circle (1) Line (1) Polar Array (1) Hatch (1)	**6**	
	b		Inkjet: Cheaper set up cost, smaller than laser printer, takes a larger range printing mediums. (1) Laser: Faster, sharper text, image, greater buffer memory, more cost effective for large print runs, usually quieter. (1) 1 mark for any acceptable answer for each printer	**2**	
				8	